180D-9

Performance Enhanced For Tier-4 Final

MOVING YOU FURTHER

HYUNDAI HEAVY INDUSTRIES

HYUNDAI
CONSTRUCTION EQUIPMENT AMERICAS, INC.

Some of the photos may include optional equipment.

Your satisfaction is **our priority!**

Hyundai introduces a new line of 9-series diesel forklift trucks.
The newly designed 4 wheel counterbalance trucks provide
every operator comfortable driving, increased productivity and easy maintenance.

New Diesel Forklift with Proven Quality and Advanced Technology

- Maximum performance
- Spacious operator's cab
- Load indicator system
- OPSS system for safe operation
- Easy serviceability
- Hi-mate (Remote Managegement System)

Some of the photos may include optional equipment.

High Efficiency &
Optimal Performance

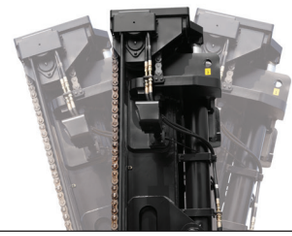

Some of the photos may include optional equipment.

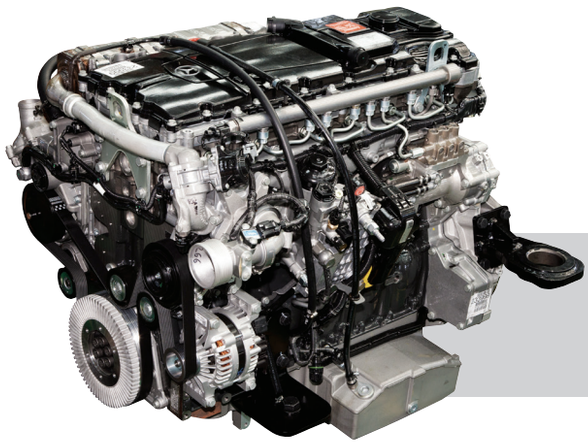

Benz(MTU) OM936(6R1000) Engine
281hp/2,200rpm

Powerful Engine
The six cylinders turbo-charged engine is built for power, reliability and economy. This engine meets EPA Tier 4 and EU stage emission regulation.

Excellent fuel efficiency
Fuel consumption rate is improved than previous model.

SCR (Selective Catalytic Reduction)
No DPF and no DOC required

EGR(Exhaust Gas Recirculation)
- High torque at low speeds
- Excellent transient behavior

Powerful Tier IV Final Diesel engine and high technology systems provide you with enhanced performance and highest productivity.

180D-9

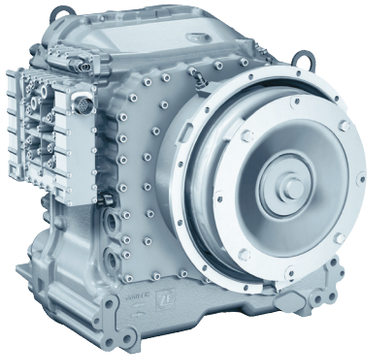

ZF Full-automatic Transmission

Full-automatic transmission offers convenient handling and soft, smooth shifting. The operator can select two kinds of automatic modes. (1st 3rd, 2nd 3rd)
Improved Torque converter with stator free wheel provides enhanced fuel efficiency.

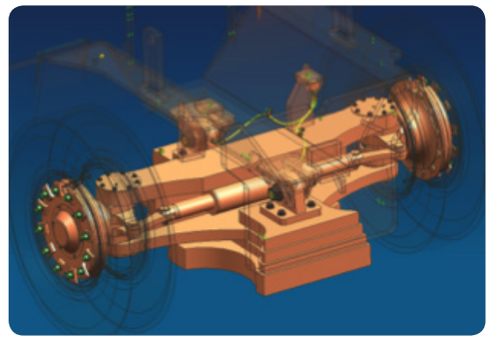

Fully Hydrostatic Power Steering

The hydraulic steering system always guarantees smooth and flexible steering, preventing over-run and kick-back.

Load Sensing System

Hydraulic fluid is only applied based on sensing pressure and load weight.

Kessler Durable drive axle

The planetary reduction drive axle smoothly delivers desired torque to the drive wheels.

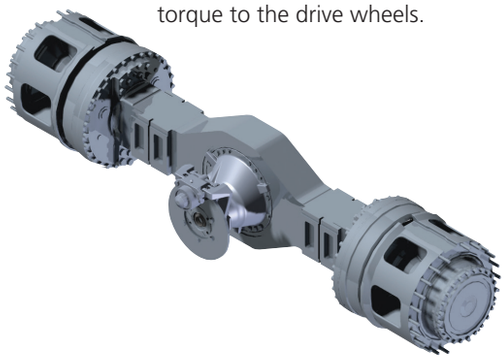

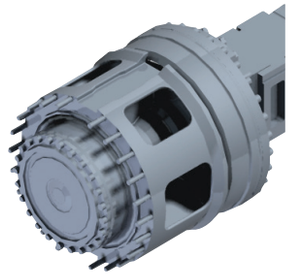

Wet Disc Brake System

The wet disc brake system is virtually maintenance free and is enclosed to protect from dust and water.

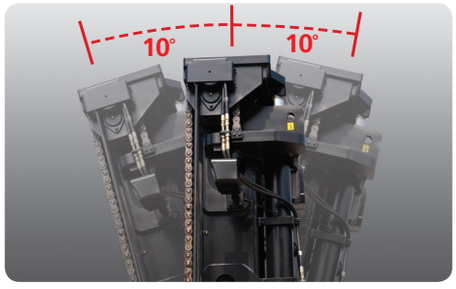

Increased mast tilting angle

Utilizing the mast tilting angle of 10 degrees forward and 10 degrees backward, the operator can perform loading and unloading jobs safely and rapidly.

Max.Gradeability (loaded/Unloaded)	
Model	%
180D-9	31.1 / 30.4

Max.Travel Speed (Unloaded)	
Model	mph
180D-9	23

Faster Travel Speed & Better Gradability

The powerful engine provides greater acceleration, better gradability and faster travel speed on any tough terrains or slopes.

Optimized Ergonomics

Some of the photos may include optional equipment.

Spacious operator cabin

The newly designed cabin was conceived for more space, a wider field of view and operator comfort.

MP3 CD Player & Remote Control

Bluetooth Hands Free Socket (Option)

Centralized Instrument switch Panel

Luxury(Air-suspension+Heat+HeadRest) seat(Option)

An attractive and adjustable seat, based on a human engineering design, provides great comfort, safety and durability.

Quick Response of Operating Control Levers
Only minimal operator's effort is required for precise, safe and productive control.

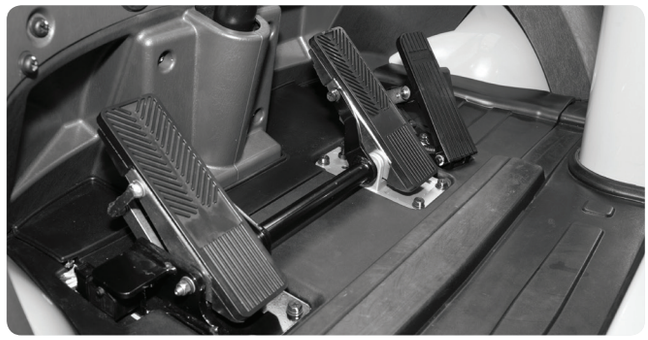

Ergonomically positioned pedals
Based on human engineering, the accelerator, brake and inching pedals are optimally positioned for the operator's convenience.

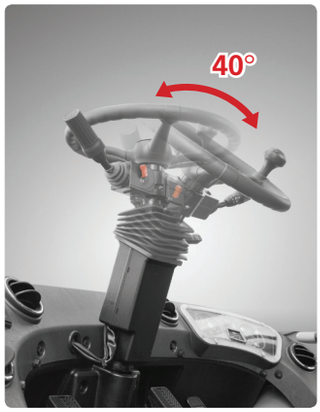

Top - Wiper (STD)
Offers clear visibility on the roof

Adjustable steering column
The steering wheel assembly is easily adjustable, allowing all size of operators excellent comfort.

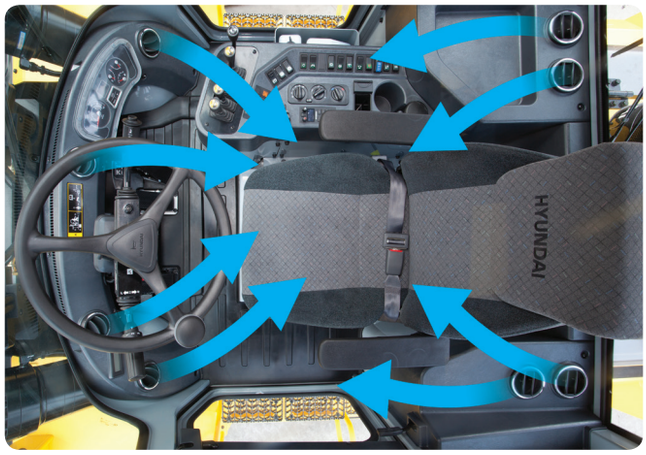

High-output Air Conditioner & Heater
An air conditioner with high-output and heater always provides you with comfortable environment when you work.

Advanced **Safety**

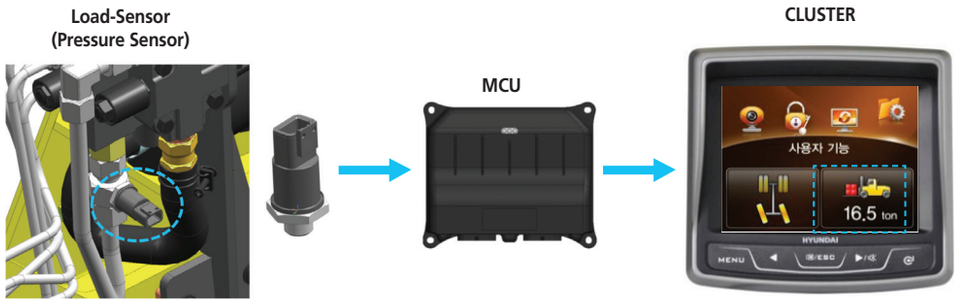

Load indicator

The optional load indicator displays the load weight within the monitor. The load sensor reduces the time to check loaded weight and the alarm alerts the driver when overloaded.

Adjustable Engine Low Idle RPM

While engine is running, low idle rpm can be increased in increments of 25rpms, and it keeps previously set rpm when engine restarts. When starting, engin rpms return to original.

State-of-the-Art Cooling System

The minimum fuel consumption and low noise are available by applying hydraulic cooling fan sensing intake air temperature, transmission oil temperature, coolant temperature and hyraulic temperature.

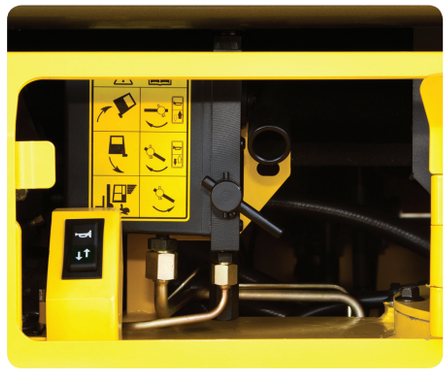

Electronic Cab Tilting System

Electronic Cab Tiliting System makes servicing of all power train components quick and easy. An electrically assisted hydraulic actuated cylinder tilts enclosed cab to left side about 65 degrees for easy access to truck components.

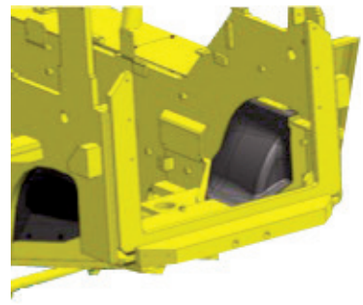

Rear Tire cover

The Rear tire cover is included to prevent clogging of the radiator from foreign substances.

The safely designed compartment makes operations more comfortable.

OPSS
(Operator Presence Sensing System)

When the operator is not in the seat all mast and drive movements are not functional.

Lift Lock Tilt Lock Drive Lock

Some of the photos may include optional equipment.

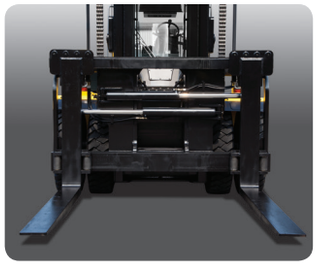

Highly durable Carriage
Applying high tensile structional steel, the carriage has excellent durability.

Large footboard & Handle
Wide "open" step offers convenience and safety when entering and exiting the truck.

Excellent Night Work
- Various position of work lamp provides the operator more comfortable and safe operating environments.
- Front : fender(2), mast(4) - Rear : cab(2)
- LED Rear Combination Lamp

Fast and Easy **Maintenance**

Some of the photos may include optional equipment.

Large Engine Hood
Highly accessible engine compartment assures fast and efficient maintenance.

Easy Change Air Cleaner
This air filter is readily accessible for cleaning or replacement.

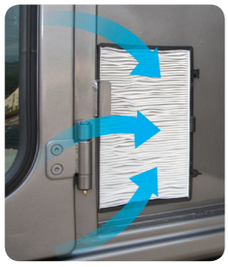

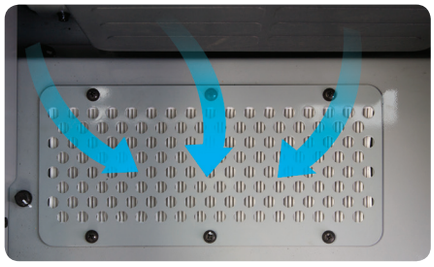

Cabin Air Fresh Filter
The internal pressure is maintained to be slightly higher than that of outside to exclude dust and to reduce noise levels.

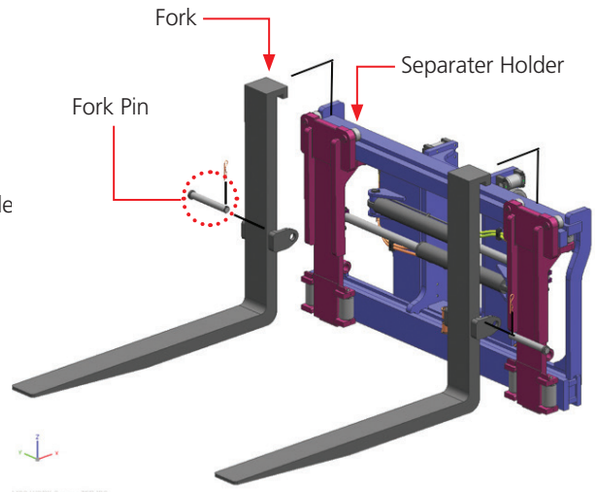

Separator holder type Fork Carriage(Option)
Removal and replacement of various attachments and forks can be done effortlessly with the separator holder system, improving handling while reducing downtime.

An ideal arrangement of components
ensures easy access and convenience for maintenance.

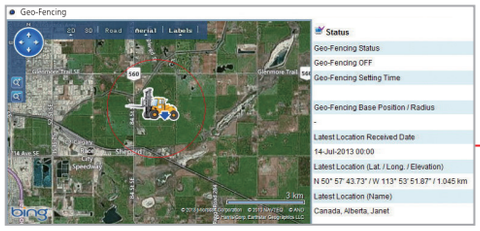

Hi-mate (Remote Management System)
Hi-mate, Hyundai's proprietary remote management system, provides operators and dealer service personnel access to vital service and diagnostic information on the machine from any computer with internet access.

Rear View Camera (Option)
The rear view camera makes the operation even more convenient. And it supports 4 camera channels.

Some of the photos may include optional equipment.

Master Switch
A master switch disconnects the battery power to protect the electrical system from excess electrical drainage.

Maintenance Management Display

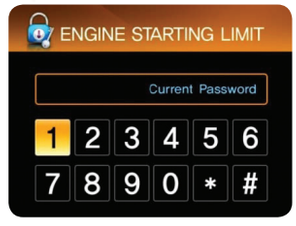

Engine Start Limit

Dimension

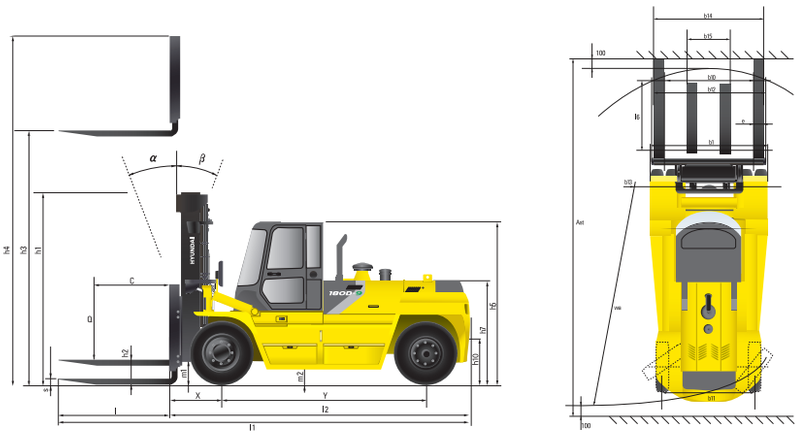

Specification

Identification			
1. 1	Manufacturer		HYUNDAI
1. 2	Manufacturer's type designation		180D-9
1. 3	Drive : electric(battery or mains) ,diesel, petrol ,fuel gas, manual		DIESEL
1. 4	Type of operation : hand, pedestrian, standing, seated, order - picker		seated
1. 5	Load capacity / rated load	lb	40,000
1. 6	Load center distance	c in	36
1. 8	Load distance, center of drive axle to fork	x in	39
1. 9	Wheelbase	y in	147.6
Weights			
2. 1	Service weight	lb	57,528
2. 2	Axle loading, loaded front / rear	lb	88,110 / 9,447
2. 3	Axle loading , unloaded front / rear	lb	28,332 / 29,542
Wheels, Chassis			
3. 1	Pneumatic		Pneumatic
3. 2	Tires size, front(Φ x width)		12.00 - 20 - 20PR
3. 3	Tires size, rear(Φx width)		12.00 - 20 - 20PR
3. 5	Wheels, number front rear(x = driven wheels)		4 x 2
3. 6	Track width, front	in	73.2
3. 7	Track width, rear	in	90.6
Basic Dimensions			
4. 1	Mast / fork carriage tilt forward / backward	degrees	10 / 10
4. 2	Lowered mast height	h1 in	131.9
4. 3	Lift height	h3 in	130.7
4. 4	Extended mast height	h4 in	195.3
4. 5	Overhead guard (cab) height	h5 in	117.7
4. 6	Seat height / Standing height	h7 in	84.6
4. 7	Coupling height	h10 in	24.0
4. 8	Overall length	l1 in	316.7
4. 9	Length to face of forks	l2 in	220.3
4. 10	Overall width	b1 in	100.0
4. 11	Fork dimensions	s / e / l in	3.9 x 9.8 x 96.5
4. 12	Fork - carriage width	b3 in	116.1
4. 13	Ground clearance, loaded, under mast	m1 in	9.6
4. 14	Ground clearance, centre of wheelbase	m2 in	14.6
4. 15	Aisle width for pallets 1,000 x 1,200 crossways	Ast in	353.7
4. 16	Aisle width for pallets 800 x 1,200 lengthways	Ast in	353.7
4. 17	Turning radius	Wa in	205.5
4. 18	Smallest pivot point distance	mm	80.6
Performance Data			
5. 1	Travel speed, unloaded	mph	23
5. 2	Lift speed, loaded/ unloaded	mm/s	72.8 /82.7
5. 3	Lowering speed, loaded/unloaded	mm/s	82.7 / 59.1
5. 5	Drawbar pull, Loaded	KN	150
5. 7	Gradient performance, Loaded	%	31.1
5. 10	Service brake		Wet, Hydraulic
Engine			
6. 1	Engine manufacturer / type		BENZ(MTU)
6. 2	Engine power acc. to ISO 1585	hp	281
6. 3	Rated speed	1/min	2,200
6. 4	No. of cylinder / cubic capacity	/cm³	7,700
6. 5	Fuel consumption acc. To VDI cycle	ℓ/h	14.8
Other Details			
8. 1	Type of drive control		Power Shift
8. 2	Operating pressure for attachments(system/attach)		240 / 160
8. 3	Oil volume for attachments		270
8. 4	Sound level at driver's ear according to DIN 12 053		76.9

Mast Specification

Mast Type		Maximum Fork Height(in)	Overall Height Lowered(in)	Tilt Angle (deg) Fwd / Bwd	Load Capacity (36in LC)(lb)	Truck Weight Unloaded(lb)
SIMPLEX MAST	V300	118.9	126.0	10 / 10	40,000	57,246
	* V330	130.7	131.9	10 / 10	40,000	57,528
	V350	138.6	135.8	10 / 10	40,000	57,694
	V400	158.3	145.7	10 / 10	40,000	58,513
	V450	178.0	155.5	10 / 10	40,000	58,834
	V500	197.6	165.4	10 / 10	40,000	59,664
	V550	217.3	175.2	10 / 10	40,000	60,138
	V600	237.0	185.0	10 / 10	40,000	60,611
	V650	256.7	194.9	10 / 10	40,000	61,045
	V700	276.4	204.7	10 / 10	40,000	61,465
TRIPLEX MAST	TS460	182.4	116.1	10 / 10	40,000	60,296
	TS508	200.2	122.0	10 / 10	40,000	60,676
	TS538	212.0	126.0	10 / 10	40,000	61,052
	TS568	223.8	129.9	10 / 10	40,000	61,255
	TS600	238.0	134.6	10 / 10	40,000	61,557
	TS658	259.2	141.7	10 / 10	40,000	61,986
	TS700	276.9	147.6	10 / 10	40,000	62,314

Load Capacity

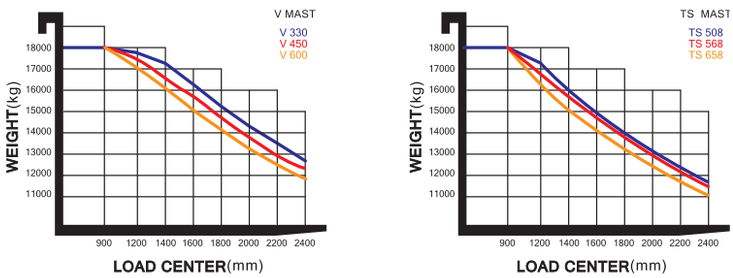

Optional Items

- **Fork(L x W x T)(in)**
  106 x 9.8 x 4.3 / 124 x 9.8 x 14.3 /144 x 9.8 x 4.3 / 146 x 9.8 x 4.3
- **MCV** : 6-SPOOL
- **Air compressor**
- **Separator holder type fork carriage**
- **Beacon lamp**
- **Air Conditioner & Heater**
- **Rear view camera**

HYUNDAI | FORKLIFT
CONSTRUCTION EQUIPMENT AMERICAS, INC.

6100 Atlantic Blvd Norcross, GA 30071
TEL (678) 823 7777 FAX (678) 823 7778

9990009-503290

PLEASE CONTACT

www.hceamericas.com

2014. 10 Rev. 0